HSF

NOTES:
Rated Current: 0.5~1.0 AMP.
Contact Resistance: 25mΩ Max.
Withstand Voltage: 500V
Insulation Resistance: 10000MΩ Min.
Operation Temperature: −55℃ to +125℃

Contact Material: Phosphor Bronze
Contact Plating: Sn and Au over Ni
Tail Material: Phosphor Bronze
Tail Plating: Sn over Ni
Main Body Material: LCP
CAP Material: LCP

Ordering Information

3910- P XXX - 099 M XX W R 1

No.of Pins
010: 10 Pin
020: 20 Pin
100: 100 Pin

Plating
S0=Gold Flash/Tin
S1=3U" Au/Tin
S2=5U" Au/Tin
S3=10U" Au/Tin
S4=15U"Au/Tin
S5=30U" Au/Tin

Package
R: Tape & Reel

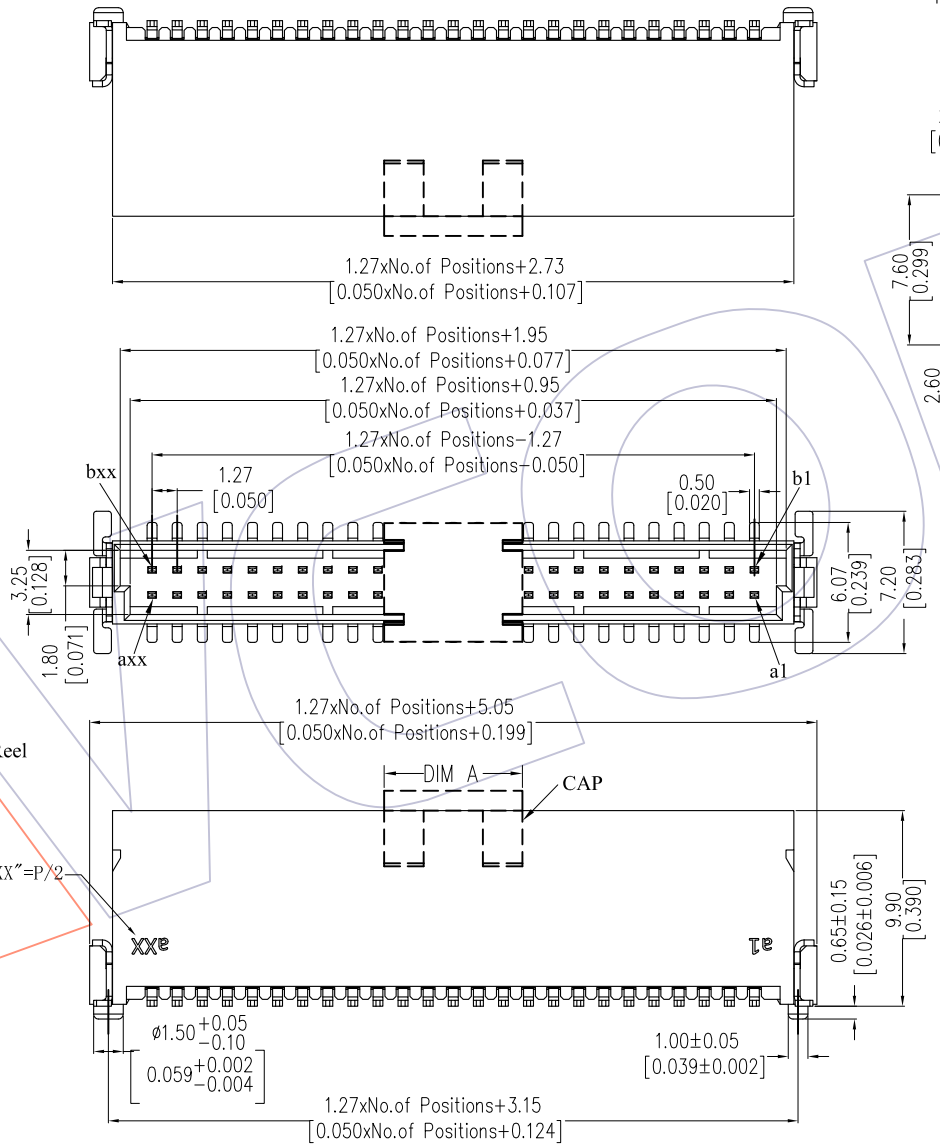

Recommended P.C.B Layout(Top Side)
(PCB BOARD TOLERANCE±0.05)

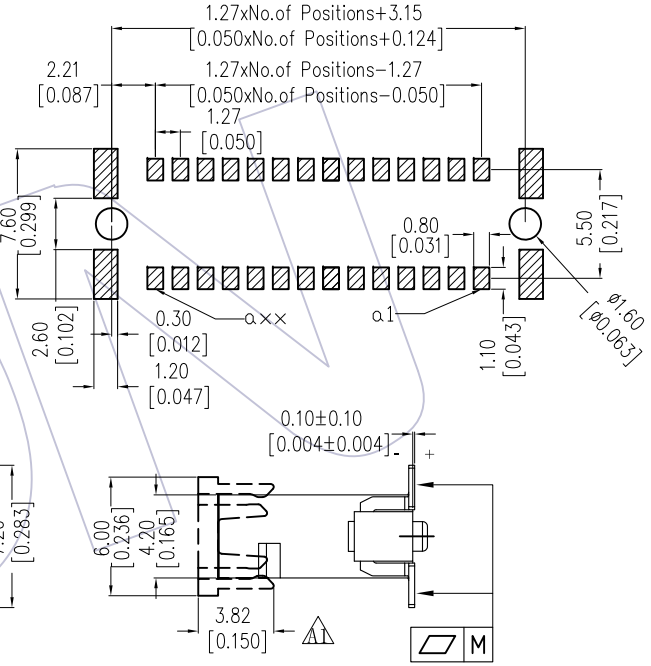

PIN	M
10~40PIN	0.12
42~100PIN	0.15

P/N	HOUSING PIN	DIM A
CAP3910-G201	10-24	7.00
CAP3910-G202	26-100	16.00

REV	DATE	MODIFICATION DESCRIPTION	CHANGE
A2	2018/05/04	Modify	
A1	2018/04/18	Modify the CAP	
A0	2018/03/23	NEW	

OPERATION	
X.X	±0.40
X.XX	±0.25
X.XXX	±0.15
Angle	± 3°
DIM	TOL

DRAW	Ding	DATE	2018/05/04
CHECK		DATE	
APPROVE		DATE	

SCALE	1:1
UNIT	mm
SIZE	A4
SHEET	1/1
PROJ.	

PART NO. 3910-PXXX-099MXXWR1

TITLE: A2
1.27Pitch SDC CONNECTORS MALE
H=9.90mm(TYPE Q)

Customer NO.

WCON
Http: www.wcon.com

WCON-Dongguan
Tel: +86 769 85358920
Fax: +86 769 85358915
E-mail: sales@wcon.com

WCON-Kunshan
Tel: +86 512 57468408
Fax: +86 512 57468468
E-mail: salesks@wcon.com